Stealth Essence SPP Cushion Order Form

401 York Ave., Duryea, PA 18642 | Phone: 866-800-2002 | Fax: 866-707-3422 | Email: quantumorders@pridemobility.com

Account Number:_____ Date: _____

Provider Name: _____

Contact: _____

Phone: _____ Fax: _____

Email: _____

PO Number: _____

Marked for: _____

Ship to Address: _____

City: _____ State: _____ Zip: _____

Stealth Essence SPP Cushion specifications:

- **Skin Protection and Positioning.**
- **Low profile, lateral and pre-ischial shelf**
- **Contoured, high-density molded foam base, coccyx and sacral relief.**
- **Weight capacity: 10-15" W: 175 lbs., 16-21" W: 350 lbs., 22" W: 450 lbs.**
- **Coolcore® technology cover.**
- **Solid seat insert included.**
- **Optional Small, Medium or Large Wedge Kit**

**Stealth Products® Cushions feature patented Coolcore® technology, a chemical free, four-way stretch material that offers moisture wicking, moisture transportation, and moisture evaporation properties.*

Introduction

This form is interactive when viewed with Adobe Acrobat Reader® and may not function correctly if opened with applications other than Acrobat. Complete the form by placing checks in the desired boxes and provide information in the interactive fields. Buttons shown at the bottom of the form may be utilized to print or submit the order form through a desktop email application. To email via a web-based application, please 'Save As' and attach the PDF to your email.

HCPCS codes provided should not be considered as legal advice and do not guarantee reimbursement. DME providers are responsible for determining the appropriate billing codes when submitting for insurance reimbursement. Payer coding, coverage, and bundling guidelines may apply. All prices are MSRP. Prices, specifications, part numbers, and availability are subject to change without notice. Prices and part numbers as shown are only available when configured as a complete power chair. Please contact technical service for accurate parts ordering.

1. Essence SPP Cushion Selection

The XXYY portion of all part numbers in this section directly relate to the dimensions of the cushion, where XX represents the width and YY represents the depth. For example, a 16" wide and 18" deep cushion would be ST-ESSSPP1618. Available sizes are shown on the chart below.

☐ **Essence SPP Cushion, up to 20" Wide, E2607 ..... $441**

☐ **Essence SPP Cushion, 22" Wide, E2608 ..... $551**

Cushion Part: ST-ESSSPP*XXYY*

Cushion Width: _____

Cushion Depth: _____

Depth \ Width	10"	12"	14"	15"	16"	17"	18"	19"	20"	21"	22"
10"				—	—	—	—	—	—	—	—
12"				—	—	—	—	—	—	—	—
14"				—	—	—	—	—	—	—	—
15"	—	—			—	—	—	—	—	—	—
16"	—	—						—		—	—
17"	—	—								—	—
18"	—	—								—	
19"	—	—	—	—						—	—
20"	—	—	—	—							
21"	—	—	—	—	—	—	—	—	—		—
22"	—	—	—	—	—	—	—	—	—		
24"	—	—	—	—	—	—	—	—	—	—	

2. Wedge Kit Selection

The Essence SPP Cushion is available with optional Small, Medium or Large Wedge kits.

Small Wedge Kit
1/2 inch Height

☐ **Small Wedge, Positioning Kit $39**
14"W and smaller
Part: POP1909006-S

☐ **Small Wedge, Positioning Kit $39**
15"W and larger
Part: POP1712340-S

Medium Wedge Kit
1 1/2 inch Height

☐ **Medium Wedge, Positioning Kit..... $72**
14"W and smaller
Part: POP1909006-M

☐ **Medium Wedge, Positioning Kit..... $72**
15"W and larger
Part: POP1712340-M

Large Wedge Kit
2 inch Height

☐ **Large Wedge, Positioning Kit..... $105**
14"W and smaller
Part: POP1909006-L

☐ **Large Wedge, Positioning Kit..... $105**
15"W and larger
Part: POP1712340-L

3. Poyurethane Fluid Proof Liner Selection

The Essence SPP cushion is available with an optional Polyurethane liner.

Cushion Size	Part	MSRP
☐ 10"W x 10"D	PUL1709080-1010	$79
☐ 10"W x 12"D	PUL1709080-1012	$79
☐ 10"W x 14"D	PUL1709080-1014	$79
☐ 12"W x 10"D	PUL1709080-1210	$79
☐ 12"W x 12"D	PUL1709080-1212	$79
☐ 12"W x 14"D	PUL1709080-1214	$79

Polyurethane Liner Selection continued on next page.

Polyurethane Fluid Proof Liner Selection continued

Cushion Size	Part	MSRP
☐ 14"W x 10"D	PUL1709080-1410	$79
☐ 14"W x 12"D	PUL1709080-1412	$79
☐ 14"W x 14"D	PUL1709080-1414	$79
☐ 14"W x 15"D	PUL1709080-1415	$79
☐ 14"W x 16"D	PUL1709080-1416	$79
☐ 14"W x 17"D	PUL1709080-1417	$79
☐ 14"W x 10"D	PUL1709080-1410	$79
☐ 14"W x 12"D	PUL1709080-1412	$79
☐ 14"W x 14"D	PUL1709080-1414	$79
☐ 14"W x 15"D	PUL1709080-1415	$79
☐ 14"W x 16"D	PUL1709080-1416	$79
☐ 14"W x 17"D	PUL1709080-1417	$79
☐ 14"W x 18"D	PUL1709080-1418	$79
☐ 15"W x 15"D	PUL1709080-1515	$79
☐ 15"W x 16"D	PUL1709080-1516	$79
☐ 15"W x 17"D	PUL1709080-1517	$79

Cushion Size	Part	MSRP
☐ 15"W x 18"D	PUL1709080-1518	$79
☐ 16"W x 16"D	PUL1709080-1616	$79
☐ 16"W x 17"D	PUL1709080-1617	$79
☐ 16"W x 18"D	PUL1709080-1618	$79
☐ 16"W x 19"D	PUL1709080-1619	$79
☐ 16"W x 20"D	PUL1709080-1620	$79
☐ 17"W x 16"D	PUL1709080-1716	$79
☐ 17"W x 17"D	PUL1709080-1717	$79
☐ 17"W x 18"D	PUL1709080-1718	$79
☐ 17"W x 19"D	PUL1709080-1719	$79
☐ 17"W x 20"D	PUL1709080-1720	$79
☐ 18"W x 16"D	PUL1709080-1816	$79
☐ 18"W x 17"D	PUL1709080-1817	$79
☐ 18"W x 18"D	PUL1709080-1818	$79
☐ 18"W x 19"D	PUL1709080-1819	$79
☐ 18"W x 20"D	PUL1709080-1820	$79

Cushion Size	Part	MSRP
☐ 19"W x 17"D	PUL1709080-1917	$79
☐ 19"W x 18"D	PUL1709080-1918	$79
☐ 19"W x 19"D	PUL1709080-1919	$79
☐ 19"W x 20"D	PUL1709080-1920	$79
☐ 20"W x 16"D	PUL1709080-2016	$79
☐ 20"W x 17"D	PUL1709080-2017	$79
☐ 20"W x 18"D	PUL1709080-2018	$79
☐ 20"W x 19"D	PUL1709080-2019	$79
☐ 20"W x 20"D	PUL1709080-2020	$79
☐ 21"W x 20"D	PUL1709080-2120	$79
☐ 21"W x 21"D	PUL1709080-2121	$79
☐ 21"W x 22"D	PUL1709080-2122	$79
☐ 22"W x 18"D	PUL1709080-2218	$79
☐ 22"W x 20"D	PUL1709080-2220	$79
☐ 22"W x 22"D	PUL1709080-2222	$79
☐ 22"W x 24"D	PUL1709080-2224	$79

4. Alternate Cushion Cover Selection

The Essence SPP cushion is standard with a Coolcore cover. Some sizes can be substituted with a Mesh Cover. A credit will be applied.

4.a. Install Mesh Cover

☐ Credit for Mesh as Alternate Cover ..... -$105
Part: PTOINDV3875

4.b. Mesh Cover Selection

Cushion Size	Part	MSRP
☐ 16"W x 16"D	ESSSPP-MBLK1616	$105
☐ 16"W x 18"D	ESSSPP-MBLK1618	$105
☐ 16"W x 20"D	ESSSPP-MBLK1620	$105
☐ 18"W x 16"D	ESSSPP-MBLK1816	$105

Cushion Size	Part	MSRP
☐ 18"W x 18"D	ESSSPP-MBLK1818	$105
☐ 18"W x 20"D	ESSSPP-MBLK1820	$105
☐ 20"W x 16"D	ESSSPP-MBLK2016	$105
☐ 20"W x 18"D	ESSSPP-MBLK2018	$105

Cushion Size	Part	MSRP
☐ 20"W x 20"D	ESSSPP-MBLK2020	$105
☐ 22"W x 20"D	ESSSPP-MBLK2220	$105
☐ 22"W x 22"D	ESSSPP-MBLK2222	$105
☐ 22"W x 24"D	ESSSPP-MBLK2224	$105

5. ACM Board Selection

The Essence SPP cushion is available with an optional ACM Board. For use on Manual Wheelchair Only.

Cushion Size	Part	MSRP
☐ 15"W x 16"D	CUS142467-1616	$85
☐ 15"W x 17"D	CUS142467-1616	$85
☐ 15"W x 18"D	CUS142467	$85
☐ 16"W x 16"D	CUS142467-1616	$85
☐ 16"W x 17"D	CUS142467 -1616	$85
☐ 16"W x 18"D	CUS142467	$85
☐ 16"W x 19"D	CUS142467	$85
☐ 16"W x 20"D	CUS142467	$85
☐ 17"W x 16"D	CUS142466-1816	$85

Cushion Size	Part	MSRP
☐ 17"W x 17"D	CUS142466-1816	$85
☐ 17"W x 18"D	CUS142466-1818	$85
☐ 17"W x 19"D	CUS142466-1818	$85
☐ 17"W x 20"D	CUS142466	$85
☐ 18"W x 16"D	CUS142466-1816	$85
☐ 18"W x 17"D	CUS142466-1816	$85
☐ 18"W x 18"D	CUS142466-1818	$85
☐ 18"W x 19"D	CUS142466-1818	$85
☐ 18"W x 20"D	CUS142466	$85

Cushion Size	Part	MSRP
☐ 18"W x 22"D	CUS142466	$85
☐ 19"W x 18"D	CUS142465-2018	$85
☐ 19"W x 19"D	CUS142465-2018	$85
☐ 19"W x 20"D	CUS142465	$85
☐ 20"W x 18"D	CUS142465-2018	$85
☐ 20"W x 19"D	CUS142465-2018	$85
☐ 20"W x 20"D	CUS142465	$85
☐ 20"W x 21"D	CUS142465	$85
☐ 20"W x 22"D	CUS142465	$85

Special Order Essence SPP Cushion

Please detail your special order cushion request. All special order cushion requests must be approved with the Quantum Custom Department. Please contact Quantum Inside Sales or Custom Department with questions. Extended lead time will apply. Cushion part numbers involved will be the cushion part number listed in previous sections modified to meet special order request stated in details below. Drawings are available below for sketch details.

☐ Special Order Essence SPP Cushion. E2607/E2608 ..... $588-$877

Details (Include wedges in request)

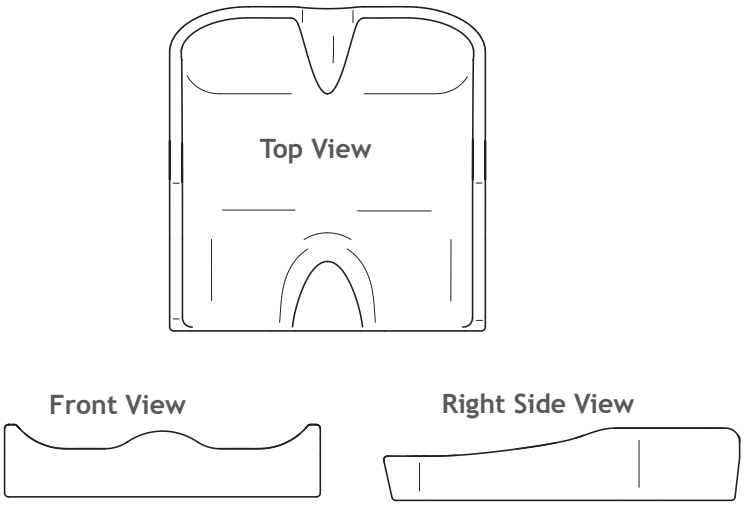

©2024 Quantum Rehab.
All rights reserved.

youtube.com/QuantumRehab
facebook.com/QuantumRehab
twitter.com/quantumrehab
instagram.com/quantum_rehab